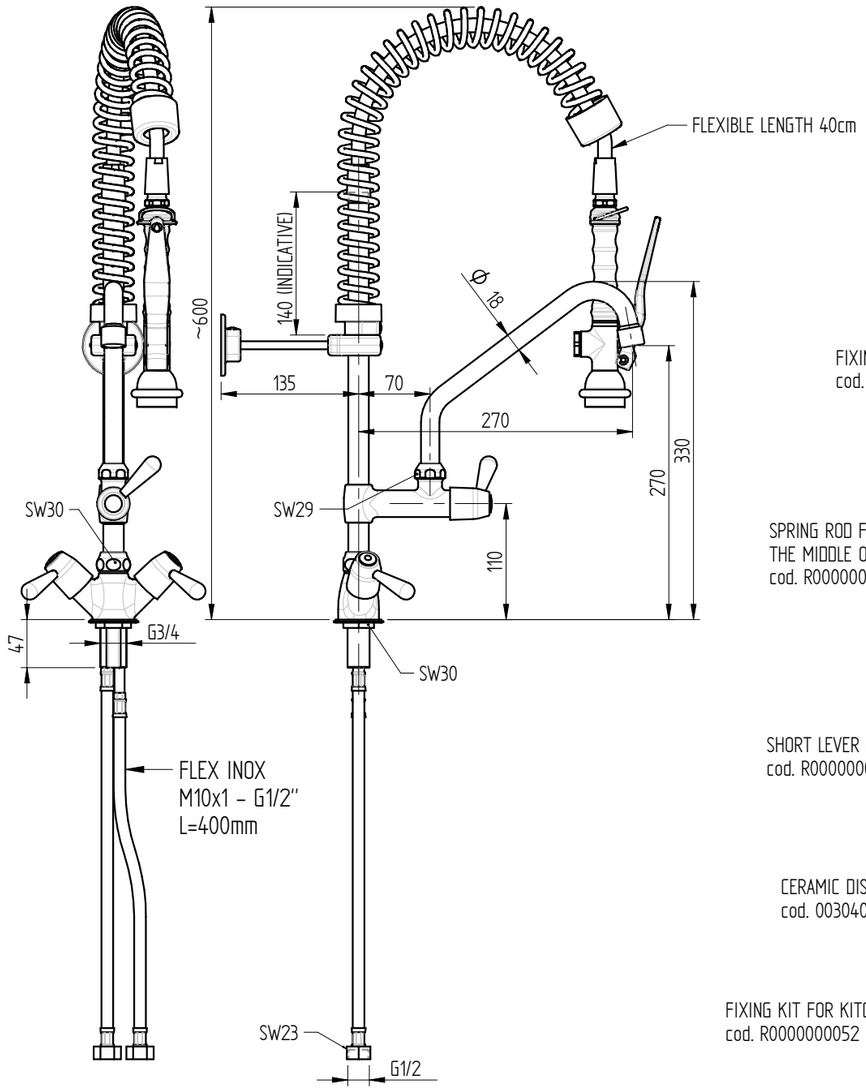

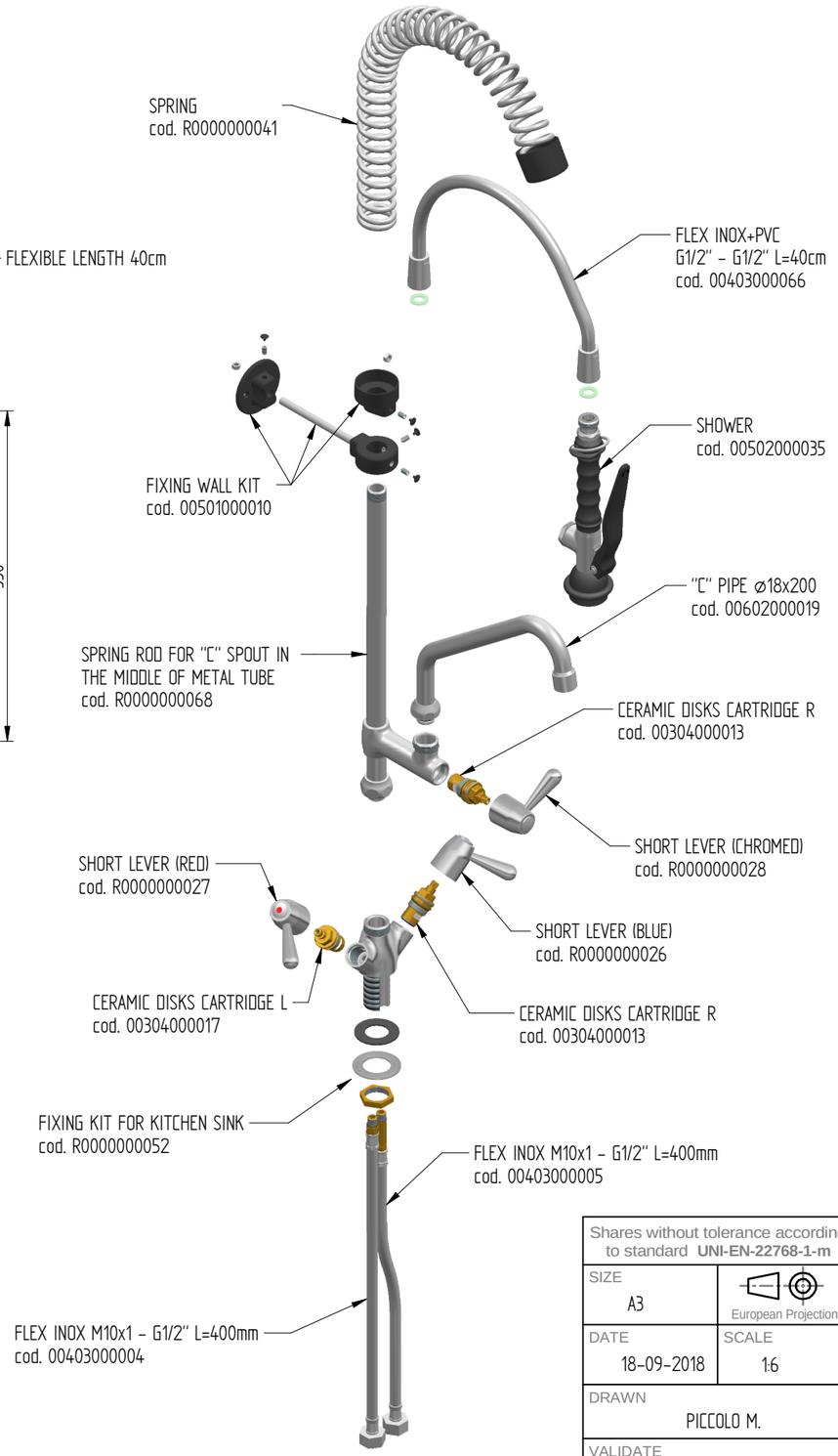

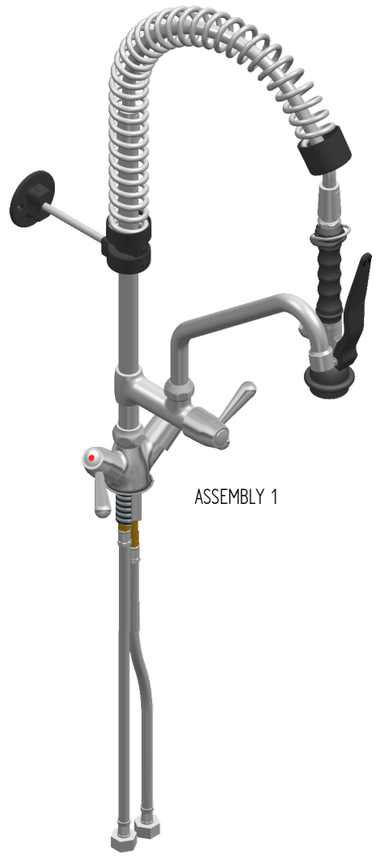

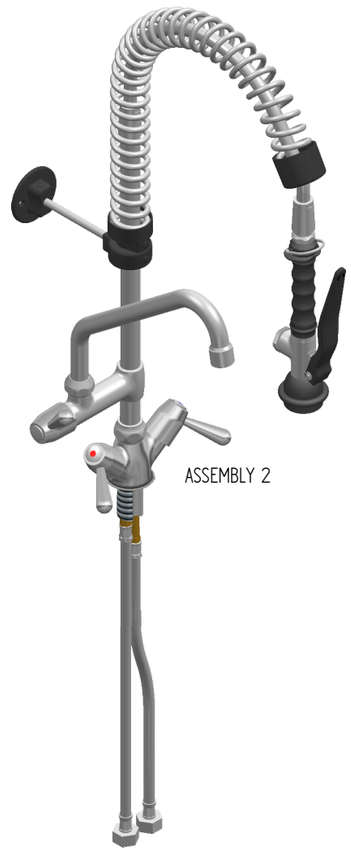

FLOW RATE : 12 L/min at 3,5 BAR only from the shower
14 L/min at 3,5 Bar onlly from the spout
18 L/min at 3,5 BAR when both + spout are open

sink fixing hole : ø27 mm

Shares without tolerance according to standard **UNI-EN-22768-1-m**		DESCRIPTION ONE HOLE PRE-RINSE UNIT WITH SWINGING "C" SPOUT ø18x200 AND LEVER HANDLE, MINI VERSION, BASIC SHOWER HAND	CODE ERAMINI192
SIZE A3	European Projection		WEIGHT 3,76 Kg
DATE 18-09-2018	SCALE 1:6	MONOLITH DESIGN AND TECHNOLOGICAL RESEARCH FOR WATER	
DRAWN PICCOLO M.			
VALIDATE PICCOLO M.		VIA DELL'ARTIGIANO 8/F-8-G , 31050 MONASTIER di TREVISO (TV) tel: 0422 842157 - fax: 0422 708978	

DONE WITH DESIGN CAD - PROHIBITED THE CHANGES MANUAL

Rev. 01 - 03/02/2022